DOST CNG RLS
ASHOK LEYLAND

Manufacturig	: 09/2021
No. Of Owners	: 1
Duplicate Keys	: N/A
KM Driven	: 8,632
Fuel Type	: CNG
Reg State	: Uttar Pradesh
Reg City	: Ghaziabad
Insurance Expiry	: 19/09/2025
RC Availability	: Yes
Permit	: N/A
Permits Date Validity	: N/A

VEHICLE DETAILS

Registration Number	**UP14KT3138**	RTO	**Ghaziabad**
City	**Ghaziabad**	RTO NOC Issued	**N/A**
Inspection At	**On-Site**	Under Hypothecation	**Yes**
Branch	**Ghaziabad**	CNG/LPG Instalment	**Yes**
To be scrapped	**No**	Chassis Number Embossing	**Yes**
Manufacturing	**09/2021**	PUC Validity	**03/10/2025**
Registration	**09/2021**	MV Tax (Upto)	**LTT**
Lifespan Remaining	**7 Months, 10 Years**	Fitness (Upto)	**24/09/2025**
RC Mismatch if any	**No**		

SUMMARY

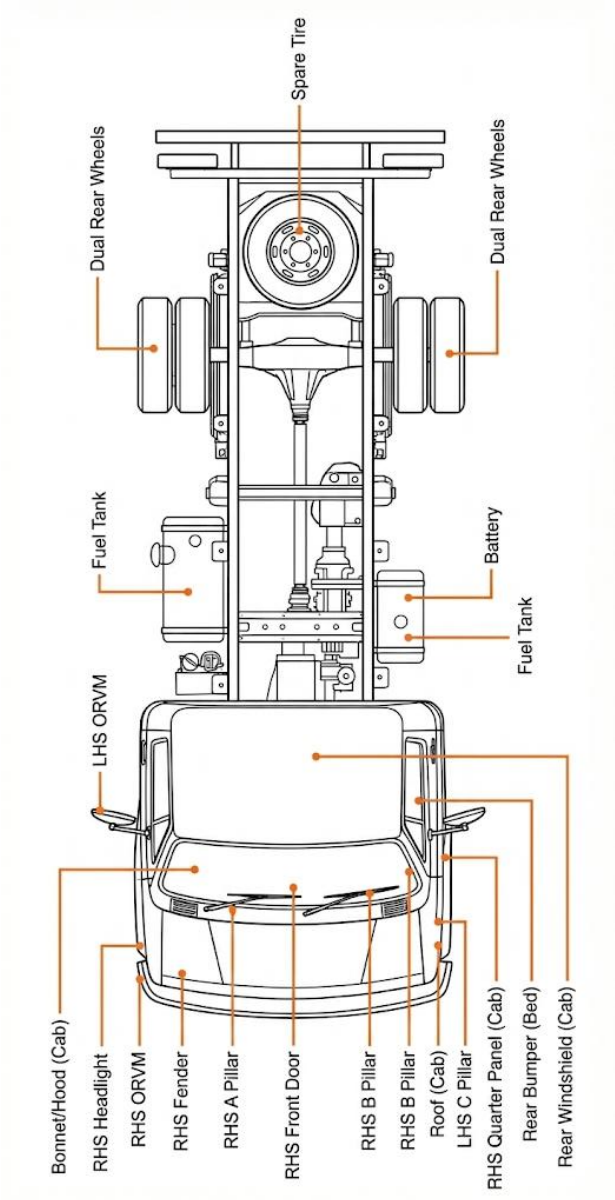

Exterior + Tyres

Part	Sub-Part	Status	Remarks / Condition
Bumper	Front / Rear	!	Minor damage on RHS and above above number plate
Cabin Panels	LHS / RHS	!	Slight Dent on LHS
Bonnet / Hood	—	!	Minor dent on LHS and RHS of Bonet

Roof (Cab)	—	!	Minor roof deformation with surface rust
Fender	LHS / RHS	✓	
Doors	LHS / RHS	✓	
Windshield	Front / Rear	✓	
Pillars	A / B / C	✓	
Load Body Floor	—	✓	
Side Panels	—	✓	
Tailgate	—	✓	
Chassis Visible Area	—	✓	
Tyre	1	!	60-70%
Tyre	2	✓	70-80%
Tyre	3	✓	80-90%
Tyre	4	✓	60-70%
Tyre	Spare		N/A
Wheels / Rims	—	✓	

Electricals + Interior

Part	Sub-Part	Status	Remarks / Condition
Battery	—	✓	
Wiring Harness	—	✓	
Headlights	LHS / RHS	✓	
Tail Lamps	LHS / RHS	✓	
Indicators	—	✓	
Horn	—	✓	
Instrument Cluster		✓	
Warning Lights	—	✓	
Dashboard	—	✓	
Seats	Driver / Co-driver	✓	
Seat Belts	—	✓	
Cabin Fan / Blower	—	✓	
Wipers	—	✓	

Engine + Transmission

Part	Sub-Part	Status	Remarks / Condition
Cold Start	—	✓	

Idling	—	✓	
Blow-by	Dipstick Test	✓	
Exhaust Smoke	—	✓	
Engine Oil	—	✓	
Coolant	—	✓	
Oil Leakage	—	✓	
Fuel Injection	—	✓	
Turbocharger	—	✓	
Clutch	—	✓	
Gear Shifting	—	✓	
Gearbox Noise	—	✓	
Propeller Shaft	—	✓	
Differential	—	✓	

Steering / Suspension + Brakes

Part	Sub-Part	Status	Remarks / Condition
Steering Free Play	—	✓	
Steering Box	—	✓	
Kingpin / Ball Joint	—	✓	

Leaf Springs	—	✓	
U-Bolts & Clamps	—	✓	
Shock Absorbers	—	✓	
Front Axle	—	✓	
Brake Pedal Feel	—	✓	
Brake Pull	—	✓	
Brake Lines	—	✓	
Parking Brake	—	✓	

Vehicle Photo Documentation Sheet

PROFILE	PHOTOGRAPH
1	
2	

3	Gen6 ASCO MOTORS CONTINUOUS DEVELOPMENT
4	MAHESH KUMAR UP-14 19970003988 9311639500 ASCO MOTORS

5	
6	

7	
8	

9	
10	rpm X100 40 32 24 16 8 km/h 12:21 AM ODO 86321 km

11	
12	

TYRE 1	
TYRE 2	

TYRE 3	
TYRE 4	